The interplay between insurance and assistance in unemployment compensation systems

Javier Ortega* and Laurence Rioux†

September 2002

Abstract

The interplay between the insurance and assistance components of unemployment compensation systems is analyzed in a matching framework à la Pissarides. We assume that when laid-off, a worker whose employment spell has lasted long enough receives, during a limited period of time, insurance benefits which depend on his past wage. The unemployed who are not eligible for insurance benefits or have exhausted their rights receive assistance benefits. The variables and parameters of the model are estimated using the French sample of the European Panel Survey (1993-1998). The model seems quite good at reproducing the main features of the French labour market. We simulate the effects of different reforms of the French unemployment compensation system, taking into account their financing. The quantitative impact on the unemployment rate of raising benefits is small and comparable for unemployment insurance (UI) and assistance (UA). Both policies ameliorate slightly the social welfare. However, while raising UA improves the welfare of all the workers, raising UI has a negative impact on UA recipients and on the employed who do not verify the eligibility criteria for UI. Increasing the duration of UI entitlement reduces slightly unemployment. This is partly due to a reduction of the wages earned by the workers who do not meet the eligibility criteria. The winners are the unemployed workers and the losers the employed ones. On the whole, the social welfare is slightly improved. Lastly, reducing the duration of the employment spell required for UI entitlement decreases the rate of unemployment and improves the welfare of all the individuals.

* University of Toulouse (GREMAQ, IDEI) and CEPR. javier.ortega@univ-tlse1.fr.

†CERC and CREST-INSEE (Paris), laurence.rioux@cerc.gouv.fr. We would like to thank Pierre Cahuc, Thierry Kamionka, Stéfan Lollivier, Géraldine Mahieu, Dirk Niepelt, Sophie Ponthieux, Sébastien Roux and seminar participants at THEMA (Cergy-Pontoise), JMA 01 (Nancy), T2M 01 (Nice), EALE 01 (Jyväskylä), Universitat Pompeu Fabra and Toulouse Seminar on Macroeconomics 01 for their comments.

1. Introduction

Most European countries are characterized by the coexistence of two unemployment compensation systems: insurance and assistance. When laid-off, a worker whose employment spell has lasted long enough receives unemployment insurance benefits. Besides this insurance system, the unemployed who are not entitled to unemployment insurance or who have exhausted their rights can still get assistance benefits from the government[1]. In the particular case of France, to be eligible for insurance benefits, a person must have been laid-off and have been employed for at least 4 months during the last 8 months. Unemployment insurance is then given for a limited duration which depends on the past employment history, and the benefit declines over time[2]. The unemployed who fail to meet the eligibility criteria or have exhausted their entitlement receive an unemployment assistance benefit (called RMI)[3], provided they are over 25 and the resources of their household, whatever their origin, are under a threshold that depends on family composition. This basic income, created in 1988, was originally aimed at fighting against poverty, but actually plays the role of the assistance component of the French unemployment compensation system. Unlike insurance benefits, assistance benefits are constant over the unemployment spell and are paid as long as the person is unemployed.

Unemployment insurance, on the one hand, and unemployment assistance, on the other hand, have been extensively analyzed, both from a theoretical and an empirical point of view. However, the *interplay* between these two compensation systems, when they happen to exist simultaneously, has not attracted much attention.

Indeed, a series of papers have studied the optimal profile of insurance benefits over the unemployment spell: flat sequence of benefits versus declining time sequence. For instance, Hopenhayn and Nicolini (1997) develop a dynamic principal-agent model where the principal, i.e. the government, maximizes the welfare of an unemployed worker whose search effort cannot be monitored. They show that unemployment benefits should decrease with the unemployment spell. In a quite different framework, a search and matching model with both endogenous wage and search effort, Friedriksson and Holmlund (1999) find the same normative result: a declining time sequence of unemployment benefits is socially optimal, that is maximizes a utilitarian welfare function. This idea has been challenged by Cahuc and Lehmann (2000) in a paper closely

[1] This is the case for example in Spain, Sweden, Germany, France or the Netherlands (see Ortega, Gollier and Portier (2000)).

[2] Until the last reform of the system July 2001.

[3] RMI: "Revenu Minimum d'Insertion", Minimum Income for Insertion.

related to the preceding one. Unlike Friedriksson and Holmlund (1999), Cahuc and Lehmann (2000) focus on the welfare of the long-term unemployed rather than on the social welfare. They show that a more declining time-sequence of unemployment benefits may strongly reduce the welfare of the long-term unemployed[4].

From an empirical point of view, a series of papers try to assess the impact on employment of some recent reforms of insurance schemes. For instance, Carling, Holmlund and Vejsiu (2000) use the Swedish evidence to estimate the effect of benefit cuts in the 90's on the exit rate from unemployment.

Unemployment assistance has also been extensively analyzed. From a theoretical viewpoint, the standard search and matching model à la Mortensen and Pissarides provides a useful framework for analyzing the effects of unemployment assistance on employment. Indeed, in this framework, unemployment benefits have the usual properties of assistance benefits: they are constant over the unemployment spell and are paid as long as the person is unemployed. The key results this standard search and matching model yields to thus apply to assistance benefits. From an empirical point of view, a series of empirical work tries to assess the impact of assistance benefits on the exit rate from unemployment. In the case of France, Laroque and Salanié (2000) and Gurgand and Margolis (2001) are recent examples.

To the best of our knowledge, however, the coexistence of unemployment insurance and unemployment assistance, which happens actually in most European countries, has not attracted much attention[5]. Yet, taking into account the interaction between these two compensation systems helps understanding their consequences on employment and welfare. A change in unemployment compensation schemes has probably not the same quantitative impact on employment and welfare in a model where both insurance and assistance coexist than in a standard model.

The aim of this paper is twofold. First, we develop a theoretical model to analyze the interactions between unemployment insurance and assistance. In a matching framework à la Pissarides (2000), we assume that the meetings between employers and job seekers are determined by a constant returns to scale function. Wages are assumed to be the Nash cooperative outcome of a (non-cooperative) bargaining between each firm and each worker. The model distinguishes two types of unemployed workers according to the type of benefits they perceived: insurance benefits or assistance benefits. When laid-off, a worker whose employment spell has lasted long enough receives unemployment insurance (UI) benefits. The unemployed who are not eligible

[4] Other related papers are Albrecht and Vroman (2001) and Van der Linden and Dor (2002).

[5] An exception is Cahuc and Zylberberg (2001).

for UI or who have exhausted their rights receive assistance benefits. In most of the cases, an UI recipient who finds a job will match the requirement for UI entitlement. This is not the case for an unemployment assistance (UA) recipient who finds a job. He must stay employed for some months before he meets the eligibility criteria for UI. Thus the model also distinguishes two types of employment, according to UI entitlement.

Second, we assess the quantitative impact, on employment and welfare, of the coexistence of unemployment insurance and assistance in the French case. We could simply calibrate the model so as to reproduce the main features of the French labour market. However, we will not proceed in this way. Most of the variables (wages, transition rates, benefits) will be estimated using the French sample of the European Panel Survey. This sample of households covering the period 1993-1998 contains informations on retrospective earnings and labor market status. An activity history data set is available. Then by applying the rules of unemployment insurance, we can reconstruct the whole sequence of insurance benefits for each unemployed worker, thanks to his past history of employment. Therefore, we know month by month if an unemployed worker is an UI or UA recipient. In the same way, we determine month by month whether or not an employed worker is entitled to UI if he loses his job. This allows us to estimate the monthly transition rates between these four states.

In this framework, we simulate the effects, on the unemployment rate, the share of UI recipients in total unemployment and the social welfare, of four reforms of the unemployment compensation system: (i) a 10% increase in the amount of assistance benefit; (ii) a 6.5% raise of the amount of insurance benefits; (iii) a 3 month increase in the duration of UI entitlement; (iv) a 1 month decrease in the employment spell duration required for UI eligibility. The first two measures allow to analyse the impact of more generous unemployment benefits when insurance and assistance coexist. The two last reforms allow for analyzing the effects of softening the eligibility criteria for UI entitlement. The simulations show these four policies have very different effects on the unemployment rate, the share of UI recipients in total unemployment and the welfare of workers, although they all reduce the welfare of firms.

As usual in this literature, an increase in assistance benefits enables the recipients of this benefit to bargain a higher wage, since their threat point is improved. In the French case, the size of this impact is important, since a 10% raise of the RMI increases wages of former UA recipients by 3.5%. In our model, this reform alters also the situation of UI recipients, since these individuals receive now a more generous UA benefit when their UI rights are exhausted. However, the associated increase of their negociated wage is very small (0.04%). Due to higher wages,

unemployment rises moderately (+1.3%). Since wages rise more for former UA recipients, the share of UI recipients in total unemployment becomes lower. We show also that a 10% increase in the UA benefit is desirable for *all* workers from a welfare point of view, even taking into account the additional financing cost. However, this positive effect is quite small.

The effects of a 6.5% increase in the amount of insurance benefits are different in two dimensions. First, while this policy improves the wages of the workers entitled to UI, it actually lowers importantly (-2.35%) the wages of former UA recipients, the reason being that a more generous UI system ameliorates indirectly the value of being employed for an UA recipient[6], and this weakens its position in bargaining. For this reason, the welfare effects of this policy both for UA recipients and for employed not eligible for insurance are negative, although the overall effect for workers is slightly positive. Finally, its effects on unemployment are comparable to those of raising UA, since the unemployment rate is expected to rise by 1.1%.

As expected, raising by 3 months the duration of UI entitlement results in a higher share of UI recipients in total unemployment (+4%). More surprising is the fact that the decrease in the number of UA recipients does more than compensate for the increase in UI recipients, and total unemployment diminishes slightly (-0.41%). This is due to the reduction (-1.4%) in the equilibrium wage of workers entitled to UA caused by the higher value associated to finding a job after this measure[7]. In this case, the division between winners and losers corresponds to a cleavage between unemployed and employed. The unemployed gain because the compensation system becomes more generous, while the employed lose either because of the cost of financing the system or due to lower wages.

Finally, a one month reduction in the employment spell duration required for UI eligibility[8] results in a lower unemployment rate (-0.82%) and a higher share of UI recipients in total unemployment (+1.72%). Indeed, this measure weakens the threat point of UA recipients when they bargain with firms over wages, which leads to an important decrease in wages (-16.56%) and a higher number of vacancies for UA recipients opened by firms. As a result, the number of UA recipients decreases, while that of UI recipients increases. All the agents gain from this measure.

The paper is organized as follows. The model is presented in section 2. In section 3, the data

[6] Indeed, an UA recipient who finds a job becomes eligible for unemployment insurance (type-1 employed) after a certain employment spell.

[7] Indeed, UA recipients expect they will at last obtain a type 1 job, and this measure raises their income in case of separation.

[8] This corresponds to an increase by almost 30% of the probability for an employed entitled to UA to become eligible to UI.

we use for estimating the main variables are presented and the model is calibrated to reproduce the main features of the French labor market. In section 4, changes in the unemployment compensation scheme are simulated and their effects on wages, the unemployment rate and the share of the unemployed entitled to unemployment insurance are assessed. Section 5 concludes and gives some directions of future research.

2. The Model

2.1. Environment

The labor market is described by a continuous-time matching model in the fashion of Pissarides [1990]. The economy consists of n individuals and an endogenous number of firms. The agents can be employed or unemployed. We depart from the standard Pissarides economy by assuming that two types of unemployment compensation coexist: unemployment insurance and unemployment assistance. UI eligibility is supposed to require an employment spell of some months, a situation met in most countries. The unemployed who do not meet this requirement receive UA benefits. While assistance benefit is constant over the unemployment spell and is paid as long as the person is unemployed, the amount of UI benefit depends on the past wage and its duration is limited. The unemployed who exhaust UI benefits become UA recipients.

It follows that two types of jobs must also be distinguished, according to UI entitlement. The reason for this distinction becomes clear if one takes the case of an UA recipient who finds a job. At the very beginning of the new employment spell, this former UA recipient still does not meet the requirement for UI entitlement. He must stay employed some months before he is entitled to UI[9]. At the opposite, an UI recipient who finds a job is supposed to meet from now on the requirement for UI[10]. These features are meant to capture the main characteristics of unemployment compensation systems in most european countries.

An employed worker who meets the eligibility criteria for UI will be called a type 1 worker (in proportion e_1). If he fails to meet the eligibility criteria, he will be called a type 2 worker (in proportion e_2). An UI (UA) recipient will be called a type 1 (2) unemployed worker (respectively in proportions u_1 and u_2). At any date, a worker is in either one of these four states.

UA and UI recipients do not have the same power when they bargain for wages with firms. It

[9] For instance, in France, to be entitled to UI, a person must have been employed for at least 4 months during the last 8 months, or 6 months during the last 12 months, or 14 months during the last 24 months (cf. table 6.1, appendix A).

[10] In fact, some UI recipients who find a job do not meet the requirement for UI at the beginning of the new employment spell.???

is thus optimal for firms to open vacancies for two types of position: the first type (in proportion v_1) for UI recipients and the second one (in proportion v_2) for UA recipients. Meetings between individuals and firms are ruled by a constant returns to scale matching function for each type of position:

$$m_i = m(v_i, u_i) \qquad i = 1, 2 \tag{2.1}$$

Given the CRS property of the technology and the standard random matching assumption, the probability for a firm with a vacant job of type i of contacting an unemployed worker of type i can be expressed as a function of the labor market tightness, $\theta_i \equiv v_i/u_i$:

$$q(\theta_i) \equiv \frac{m(v_i, u_i)}{v_i} = m(1, \frac{1}{\theta_i}) \tag{2.2}$$

Similarly, the probability for an unemployed worker of contacting a firm is:

$$\frac{m_i}{u_i} = \frac{m(v_i, u_i)}{u_i} = m(\theta_i, 1) = \theta_i q(\theta_i) \tag{2.3}$$

with $q^{/}(.) < 0$. Jobs of type i are terminated with an exogenous probability s_i per unit of time.

Let d define the transition rate from UI to UA, i.e. the rate at which an UI recipient exhausts his entitlement and becomes an UA recipient. Finally, let p denote the transformation rate of type 2 jobs into type 1 jobs, i.e. the rate at which the employed workers who fail to meet the eligibility criteria for UI become eligible. To simplify, all these transition rates are assumed to be Poisson rates[11]. Then, the model is described by the following dynamic equations:

$$\dot{e}_1 = \theta_1 q(\theta_1) u_1 - s_1 e_1 + p e_2 \tag{2.4}$$

$$\dot{e}_2 = \theta_2 q(\theta_2) u_2 - s_2 e_2 - p e_2 \tag{2.5}$$

$$\dot{u}_1 = s_1 e_1 - d u_1 - \theta_1 q(\theta_1) u_1 \tag{2.6}$$

The entire analysis will be carried out in steady state. The structure of the model is depicted in Figure 2.1. To each state corresponds a distinct asset value, which we now define.

[11] Since we are interested in the macroeconomic effects of the interplay between insurance and assistance in unemployment compensation systems, we study the case of an average worker. We can thus assume that the transition rates are Poisson rates.

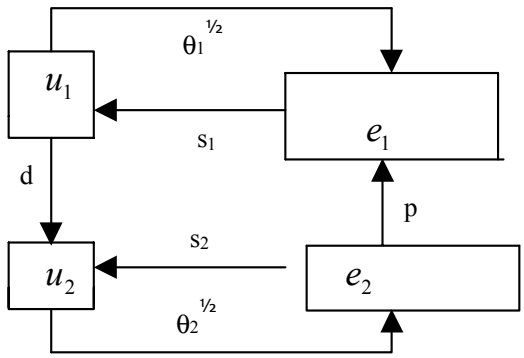

Figure 2.1: The transitions in the labor market

2.2. The Employment and Unemployment Incomes of Workers

Let U and B denote the expected discounted flow of income respectively for an UI and an UA recipient, and E_1 (E_2) the corresponding value for a worker employed in a type 1 (type 2) position.

An UI recipient receives a benefit denoted a. With an (endogenous) probability $\theta_1 q(\theta_1)$, she finds a type 1 job and gets a capital gain of $E_1 - U$ while, with a probability d, she exhausts her entitlement to UI, becomes an UA recipient and experiences a capital loss of $B - U$.

Then U verifies the following equation:

$$rU = a + \theta_1 q(\theta_1)(E_1 - U) + d(B - U) \tag{2.7}$$

For the sake of simplicity, we do not take into account that, in some countries (in particular in France over the period 1993-2001), unemployment insurance pays a declining compensation over the unemployment spell. However, this will not prevent us from studying the effect of a more declining time sequence of unemployment benefits, since an increase in d, the probability of exhausting insurance benefits, can also be interpreted as a more declining time sequence of unemployment benefits. In fact, in the model, the decrease in benefits over time stems from the coexistence of UI, that pays relatively high benefits at the beginning of the unemployment spell, and UA, that gives a relatively low compensation to those who are no more eligible for UI.

In turn, the expected discounted flow of income for an unemployment assistance recipient is given by:

$$rB = b + \theta_2 q(\theta_2)(E_2 - B) \tag{2.8}$$

While unemployed, the individual gets a fixed assistance benefit b. With a probability $\theta_2 q(\theta_2)$, she finds a type 2 job and experiences a capital gain of $E_2 - B$.

Similarly, the expected value of being employed in a type 1 position satisfies:

$$rE_1 = w_1 + s_1(U - E_1) \tag{2.9}$$

When employed in a type 1 position, an individual earns a wage w_1 which results from a wage bargaining between the individual and the firm. Should a separation occur, she bears a capital loss of $U - E_1$. The expression for the expected value of being employed in a type 2 position is analogous, except that the individual gets a type 1 position with a probability p per unit of time.

$$rE_2 = w_2 + s_2(B - E_2) + p(E_1 - E_2) \tag{2.10}$$

2.3. Firms' Optimization Decision

Firms post vacancies for type 1 (type 2) positions that are filled with an endogenous probability $q(\theta_1)$ ($q(\theta_2)$). Let γ_i denote the (per unit of time) cost of posting a vacancy of type i, V_i its value while unfilled and J_i its value while filled. The value of an unfilled vacancy thus solves ($i = 1, 2$):

$$rV_i = -\gamma_i + q(\theta_i)(J_i - V_i) \tag{2.11}$$

On the other hand, the value for a firm of a filled type 1 job (J_1) is given by:

$$rJ_1 = y_1 - w_1 + s_1(V_1 - J_1) \tag{2.12}$$

where y_1 is the worker's productivity, w_1 the wage (obtained from the wage bargaining process specified below) and $V_1 - J_1$ the capital loss born with a separation probability s_1. The expression for the value of a filled type 2 job (J_2) is analogous, except that the job becomes a type 1 position with a probability p.

$$rJ_2 = y_2 - w_2 + s_2(V_2 - J_2) + p(J_1 - J_2) \tag{2.13}$$

Firms are assumed to post vacancies of each type up to the point where the expected income from posting a further vacancy is zero ($V_i = 0$ for $i = 1, 2$). Then, from (2.11):

$$J_i = \frac{\gamma_i}{q(\theta_i)} \quad i = 1, 2 \tag{2.14}$$

stating that in equilibrium, the expected income from a filled vacancy must equal the total costs of posting it.

2.4. Wage formation

2.4.1. Type 2 Jobs

Wages of type 2 jobs are assumed to be the outcome of a bilateral Nash bargaining between each firm and its employee[12]. It is worth noting that this bargain can be continuously revised. The worker receives an income equal to E_2 when an agreement is reached. Her "threat point" is B. The income of the firm when the match occurs is J_2 and its threat point V_2. Thus w_2 is the solution to:

$$\underset{w_2}{MAX}(E_2 - B)^{\beta}(J_2 - V_2)^{1-\beta} \tag{2.15}$$

where β is the worker's bargaining power.

The optimality condition of problem (2.15) is given by:

$$(1 - \beta)(E_2 - B) = \beta(J_2 - V_2) \tag{2.16}$$

Using the expressions for B, E_2, V_2 and J_2 ((2.8) and (2.10) to (2.13)), the wage solving this problem is:

$$w_2 = \beta y + \beta p J_1 - (1 - \beta)pE_1 + (1 - \beta)(r + p)B$$

Imposing $J_2 = \frac{\gamma_2}{q(\theta_2)}$ and $V_2 = 0$ in (2.16) and using (2.8),

[12] Data show that a lot of UA recipients who find a job are paid at the hourly legal minimum wage. Nevertheless, we choose to assume that UA recipients negotiate their monthly wage. The reason for this hypothesis is that the monthly wage depends on two components: the hourly wage and the number of hours worked. Even though the hourly wage is fixed at the legal minimum wage, the number of hours worked can still be bargained over. Indeed, data show that an important part of the jobs obtained by UA recipients are part-time jobs. This leads us to think that the monthly wage in type 2 positions is endogenous.

$$(1-\beta)rB = \beta\gamma_2\theta_2 + (1-\beta)b \tag{2.17}$$

Substituting,

$$w_2 = \beta y_2 + \frac{r+p}{r}(1-\beta)b + \frac{r+p}{r}\beta\gamma_2\theta_2 + \beta p J_1 - (1-\beta)pE_1 \tag{2.18}$$

As usual in these models, the wage depends positively on labour market tightness θ_2: the worker gets a larger part of the surplus whenever meeting alternative firms is easier. It is also increasing in the productivity (y_2) and in the assistance benefit, since a higher guaranteed income improves the threat point of the individual. As type 2 jobs are turned into type 1 ones with a probability p, the situations of both the firm (J_1) and the worker (E_1) in such a case influence the negotiated wage. More precisely, if the value of a type 1 job to a firm (to a worker) is high, the firm (the worker) will be weaker when bargaining, and the resulting wage is high (low).

2.4.2. Type 1 Jobs

Wages for type 1 jobs are also assumed to be the outcome of a bilateral Nash bargaining. Thus w_1 is the solution to the following program:

$$\underset{w_1}{MAX}(E_1 - U)^{\beta}(J_1 - V_1)^{1-\beta} \tag{2.19}$$

The first order condition is given by:

$$\beta\frac{\partial E_1}{\partial w_1}(J_1 - V_1) + (1-\beta)(E_1 - U)\frac{\partial J_1}{\partial w_1} = 0 \tag{2.20}$$

From (2.7) and (2.9), we obtain the expression of E_1 as a function of w_1:

$$E_1 = \frac{w_1}{(r+s_1)} + s_1\left(\frac{a + \theta_1 q(\theta_1)E_1 + dB}{(r+s_1)(r+\theta_1 q(\theta_1)+d)}\right) \tag{2.21}$$

Thus $\frac{\partial E_1}{\partial w_1} = \frac{1}{r+s_1)}$. Then using (2.9) and (2.12), the first order condition (2.20) can be written:

$$\beta\left(\frac{y_1 - w_1}{r+s_1}\right) = (1-\beta)\left(\frac{w_1 - rU}{r+s_1}\right) \tag{2.22}$$

Simplifying, it follows that:

$$w_1 = \beta y_1 + (1-\beta)rU \tag{2.23}$$

Imposing $J_1 = \frac{\gamma_1}{q(\theta_1)}$ and $V_1 = 0$ in (2.20) and using (2.7),

$$(1-\beta)(r+d)U = (1-\beta)a + (1-\beta)dB + \beta\gamma_1\theta_1 \tag{2.24}$$

Substituting (2.24) in (2.23) and using the equilibrium expression for B (2.17), we obtain w_1:

$$w_1(r+d) = \beta y_1(r+d) + r\beta\gamma_1\theta_1 + d\beta\gamma_2\theta_2 + (1-\beta)(db+ra) \tag{2.25}$$

2.5. Equilibrium

The equilibrium is found using the free-entry conditions of firms, the equations describing the value of the different states to the agents [(2.7) to (2.13)] and the solutions to the Nash bargains. For simplicity, the matching function is assumed to be Cobb-Douglas with parameter equal to $\frac{1}{2}$ ($q(\theta_i) = \theta_i^{-1/2}$).

We first determine the labour market tightness for type 2 positions (θ_2) as a function of the situation in the type 1 jobs' market (θ_1). More precisely, from (2.11) and (2.12),

$$w_1 = y_1 - \gamma_1(r+s_1)\theta_1^{1/2} \tag{2.26}$$

Substituting w_1 in (2.25) and simplifying, we obtain an expression for θ_2 as a function of θ_1:

$$\theta_2 = \frac{1}{d\beta\gamma_2}\left[y_1(1-\beta)(r+d) - r\beta\gamma_1\theta_1 - (1-\beta)(db+ra) - \gamma_1(r+s_1)\theta_1^{1/2}(r+d)\right] \tag{2.27}$$

On the other hand, from (2.7), (2.9), (2.26) and (2.17), we get:

$$A(\theta_1)E_1 = \left(r+d+\theta_1^{1/2}\right)\left(y_1 - \gamma_1(r+s_1)\theta_1^{1/2}\right) + s_1a + \frac{s_1d\beta\gamma_2\theta_2}{(1-\beta)r} + \frac{s_1db}{r} \tag{2.28}$$

where $A(\theta_1) \equiv r\left(r+d+\theta_1^{1/2}\right) + s_1(r+d)$.

Substituting (2.28) into the equation for w_2 (2.18) and using $J_1 = \gamma_1\theta_1^{1/2}$ gives:
$w_2A(\theta_1) = \beta y_2A(\theta_1) - (1-\beta)y_1p\left(r+d+\theta_1^{1/2}\right) + p\frac{\gamma_1}{q(\theta_1)}\left[\beta A(\theta_1) + (r+s_1)(1-\beta)\left(r+d+\theta_1^{1/2}\right)\right]$
$+\left[\frac{(1-\beta)b+\beta\gamma_2\theta_2}{r}\right]\left[-ps_1d + (r+p)A(\theta_1)\right] - (1-\beta)ps_1a$
From $V_1 = 0$, $V_2 = 0$, (2.11), (2.12) and (2.14),

$$w_2 = y_2 - \gamma_2(r + s_2 + p)\theta_2^{1/2} + p\gamma_1\theta_1^{1/2}$$

Equalizing these two equations in w_2, we get the expression for θ_2 as a function of θ_1:

$$A(\theta_1)\left[(1-\beta)y_2 - \gamma_2(r+s_2+p)\theta_2^{1/2}\right] + (1-\beta)p\left(y_1 - \gamma_1(r+s_1)\theta_1^{1/2}\right)\left(r+d+\theta_1^{1/2}\right)$$
$$+\frac{ps_1 d}{r}\left[\beta\gamma_2\theta_2 + (1-\beta)b\right] - (r+p)A(\theta_1) + (1-\beta)ps_1 a = 0 \tag{2.29}$$

Substituting (2.27) into this last equation gives the labour market tightness for type 1 contracts (θ_1) as a function of the parameters of the model (p, d, γ_1, γ_2, y_1, y_2, s_1, s_2, a et b).

The steady-state equilibrium number of individuals in each state is obtained by imposing $\dot{e}_1 = \dot{e}_2 = \dot{u}_1 = 0$ in (2.4, 2.5, 2.6). After some computations, we get:

$$e_2 = \frac{ds_1\theta_2^{1/2}n}{ds_1\left[s_2+p+\theta_2^{1/2}\right] + p\theta_2^{1/2}\left[s_1+d+\theta_1^{1/2}\right]}$$

$$e_1 = \frac{p\theta_2^{1/2}[d+\theta_1^{1/2}]n}{ds_1\left[s_2+p+\theta_2^{1/2}\right] + p\theta_2^{1/2}[s_1+d+\theta_1^{1/2}]}$$

$$u_1 = \frac{ps_1\theta_2^{1/2}n}{ds_1\left[s_2+p+\theta_2^{1/2}\right] + p\theta_2^{1/2}[s_1+d+\theta_1^{1/2}]}$$

2.6. Welfare

We turn now to the welfare implications of the combination of insurance and assistance in unemployment compensation systems. First of all, the financing of these two systems has to be explicitly describe. The total amount of assistance benefits (bu_2) is supposed financed by a proportional tax (t_0) on wages (w_1 and w_2) and insurance benefits (a). The system must thus verify the budgetary constraint:

$$bu_2 = t_0(w_1e_1 + w_2e_2 + au_1)$$

which gives the following tax rate:

$$t_0 = \frac{bu_2}{w_1e_1 + w_2e_2 + au_1}$$

The total amount of insurance benefits (au_1) is supposed financed by a proportional contributory tax (t_1) on wages. The contributory tax rate thus verifies:

$$t_1 = \frac{au_1}{w_1 e_1 + w_2 e_2}$$

It is worth noting that these assumptions on the financing of UA and UI are close to the French case.

To be correct, the welfare analysis should take into account that the budgetary constraints are endogenous. However, the model then becomes untractable and multiple equilibria can occur (Rocheteau (1999)). Thus, for the sake of tractability, the agents will be supposed to take the taxes as given when they bargain for wages.

Until now, the instantaneous utility function was supposed to be linear $[u(x) = x]$, this choice being justified by an argument of tractability. However, in this case, the marginal utility is constant and not decreasing, which is not quite realistic. As a consequence, in the rest of the paper, we will study *ex post* the case of a logarithmic instantaneous utility function $[u(x) = \log x]$. *Ex post* means the welfare analysis will be carried out with the logarithmic utility function, even though the model is not solved with it[13].

Then, taking into account the financing of the unemployment compensation system, we can rewritte the instantaneous utility for each type of agents. The instantaneous utility of UA recipients is simply given by $u[b]$. UI recipients have to finance unemployment assistance. Their instantaneous utility is then equal to $u[a(1-t_0)]$. Lastly, employed workers contribute to the financing of both unemployment insurance and assistance. Their instantaneous utility is thus given by $u[w_i(1-t_0-t_1)]$, $i = 1, 2$. The equations (2.7) to (2.10) can now be rewritten:

$$r\widetilde{U} = u[a(1-t_0)] + \theta_1 q(\theta_1)(\widetilde{E}_1 - \widetilde{U}) + d(\widetilde{B} - \widetilde{U})$$

$$r\widetilde{B} = u[b] + \theta_2 q(\theta_2)(\widetilde{E}_2 - \widetilde{B})$$

$$r\widetilde{E}_1 = u[w_1(1-t_0-t_1)] + s_1(\widetilde{U} - \widetilde{E}_1)$$

$$r\widetilde{E}_2 = u[w_2(1-t_0-t_1)] + s_2(\widetilde{B} - \widetilde{E}_2) + p(\widetilde{E}_1 - \widetilde{E}_2)$$

[13] This would make the model untractable.

This system of four equations for four unknowns ($\widetilde{U}$, $\widetilde{B}$, $\widetilde{E}_1$ and $\widetilde{E}_2$) can be solved using the equilibrium values of t_0 and t_1.

The social welfare function is supposed to be utilitarian:

$$W \equiv u_1\widetilde{U} + u_2\widetilde{B} + e_1\widetilde{E}_1 + e_2\widetilde{E}_2$$

Finally, firms welfare is measured as follows:

$$W_F \equiv \frac{e_1}{e_1+e_2}\frac{\gamma_1}{q(\theta_1)} + \frac{e_2}{e_1+e_2}\frac{\gamma_2}{q(\theta_2)}$$

3. Estimation and calibration

Since the model cannot be solved analytically, the effects of a reform of the French unemployment compensation system must be simulated. The easiest way to proceed is to choose the parameters in order to reproduce the main features of the French labor market. However, we will not proceed in this way. In fact, most of the variables will be estimated using the French sample of the European Panel Survey. This sample of households covering the period 1993-1998 contains informations on retrospective earnings. An activity history data set is also available. For each month between January 1993 and December 1998, the respondents are asked to report the labor market state they are in: employed or unemployed.

The model distinguishes two types of unemployed workers according to the type of benefits they perceived: insurance benefits or assistance benefits. To get close to the model, we must thus distinguish these two types in the data. One way to proceed is to use the earnings history data set. Unfortunately, this data set provides poor quality information on the type of unemployment compensation received: both the proportions of UI and UA recipients are much lower than they should be. As a consequence, we proceed in a different way: we reconstitut, from the employment past history, the whole sequence of insurance benefits for each unemployed worker. Indeed, according to the rules of unemployment insurance in France (appendix A), the duration of UI entitlement depends on two variables: the employment past history (during the last 8, 12 or 24 months preceding the beginning of the unemployment spell) and the age.

The employment past history can be computed using the activity history data set and the age is known. The whole sequence of insurance benefits can thus be reconstituted for each unemployed worker, provided his past employment history during the last 24 months is known. However, this method cannot be applied to the unemployment spells beginning before December

1994. For these spells, we have no choice but to use the earnings history data set, in spite of its shortcomings.

For simplicity, an unemployed worker who is not entitled to UI is supposed to receive assistance benefits. Indeed, in France, the conditions to benefit from assistance are not at all restrictive: all the unemployed over 25 years are eligible, provided the ressources of their household, whatever their origine, are under a threshold.

Finally, to get close to the model, we must also distinguish, in the data, two types of employed workers according to their eligibility for UI. Using the activity history data set, we determine for each employed worker and each month if the eligibility criteria are verified.

On the whole, a worker is, each month, in one of the four following cases: unemployed and receiving UI benefits, unemployed and receiving UA benefits, employed and entitled to UI if the job is terminated (type 1 position), employed but not entitled to UI if the job is terminated (type 2 position). Let $n_i(t-1)$ denote the number of individuals in status i ($i = 1, ..., 4$) at date $t-1$, and $n_{i,j}(t)$ the number of individuals who were in status i at date $t-1$ and are in status j at date t. Then the maximum likelihood estimator of the transition rate from i to j is: $\widehat{p}_{i,j} = \frac{\sum_{t=1}^{T} n_{i,j}(t)}{\sum_{t=1}^{T} n_i(t-1)}$. Table 3.1 reports the estimated transition rates: the exit rate from unemployment for UI and UA recipients ($\theta_1^{\frac{1}{2}}$ and $\theta_2^{\frac{1}{2}}$), the rate at which UI recipients become UA recipients (d), the separation rates for type 1 and type 2 jobs (s_1 and s_2) and the transformation rate of type 2 jobs into type 1 jobs (p).

	s_1	s_2	$\theta_1^{1/2}$	$\theta_2^{1/2}$	p	d
Overall	0.8	4	7.7	4.7	23	3.2
Gender						
Men	0.77	4	8.5	5.1	22	3
Women	0.83	4	6.8	4.2	24	3.45
Education						
None or primary	1	4	6.6	3.7	22	3.6
Vocational	0.83	4.4	8.7	4.9	24	3.4
Secondary	0.86	3.8	8.8	6.3	23	2.9
Tertiary	0.5	3.6	8.1	6.4	23	2.5

Table 3.1: The estimated monthly transition rates (%).
European Panel, January 1994-December 1998, Insee.

The separation rate is much higher for the employed workers who do not meet the requirement for UI entitlement. The reason for this is that most of them occupy a temporary job. However,

it is worth noting that the transformation rate of type 2 jobs into type 1 jobs is close to 23%. As a consequence, an employed worker who do not meet the eligibility criteria for UI has a much higher probability of becoming eligible the next month than of losing his job. Not surprinsingly, UI recipients find a job more quickly than UA recipients: each month, 7.7% of the former find a job while this is the case for 4.7% of the latter. Lastly, 3.2% of UI recipients exhaust their entitlement each month and becomes UA recipients.

Men and women differ by the rate at which UI recipients exhaust their entitlement. Indeed, women have, in average, a shorter cumulated employment duration at the time they enter unemployment. As a consequence, they are entitled to shorter UI durations than men. Moreover, since women's exit rate from unemployment is lower, more of them exhaust their entitlement and become UA recipients. For the same reason, the less-educated unemployed exhaust their UI entitlement faster than the better-educated ones. For instance, 3.6% of UI recipients with non or primary education get assistance benefits the next month, versus 2.5% of the better-educated.

The model allows for 6 transitions between the 4 states (cf. figure 2.1). In particular, it does not allow an UA recipient to become a type 1 worker or a type 2 worker to become an UI recipient. This is consistent with the rules of UI and, actually, these transitions never occur in the data. Another assumption is more debatable: an UI recipient who finds a job is supposed to verify the eligibility criteria for UI at the very beginning of the new employment spell. The data show this assumption is true in 3 cases over 4. Nevertheless, two types of arguments lead us to keep this hypothesis. First, the model becomes quite untractable when this is removed. Second, a previous UI recipient currently employed has a very low probability to lose his job before he is entitled to UI (cf. s_1 in table 3.1). Therefore making this assumption seems of few consequence.

A way to verify the validity of our assumptions is to simulate, using the estimated transition rates, the rate of unemployment and the share of UI recipients, and to compare them to their observed values[14]. Then the model appears quite good at reproducing these two features of the French labor market over the period 1994-1998 (table 3.2). Indeed, the simulated rate of unemployment is very slightly below its observed value (11.56% versus 12%). The share of UI recipients is also quite close to its true value (55.5% versus 55.7%).

The comparison exercise is repeated for each gender and for different levels of education.

[14] The observed unemployment rate is computed from the French annual employment survey (cf. Insee première n° 593 for the results). For the observed share of UI recipients in total unemployment, we use the annual figures provided by UNEDIC (Bulletin de Liaison).

	Simulated data (%)		Observed data (%)	
	u	$\frac{u_1}{u}$	u (1)	$\frac{u_1}{u}$ (2)
Overall	11.56	55.5	12	55.7
Gender				
Men	10.1	59	10.4	60.4
Women	13.55	51.06	14.08	51.3
Education				
None or primary	17.11	46.5	17.28	/
Vocational	10.9	54.9	11.26	/
Secondary	10.03	65	10.8	/
Tertiary	6.34	68.8	6.96	/

Table 3.2: Comparison between simulated and observed data, 1994-1998.
(1) *Employment Survey*; (2) *Unedic*

Simulated and observed data are quite close for all these sub-populations, which confirms our conclusion: in spite of our simplifying assumptions on the number of transitions, the main features of the French labor market are well reproduced. It is worth noting that, even though women are more often unemployed than men (14% versus 10.4%), the latter are better insured than the former (60.4% versus 51.3%).

The data set provides information on the annual net wage and the cumulated duration of employment over the year. The average monthly wage over the year is deduced from these two variables. We also know for each month if an employed worker is in a type 1 or a type 2 position. Combining these informations, we compute the average monthly wage received in type 1 and type 2 jobs (table 3.3). Not surprisingly, a worker in a type 1 position (i.e. entitled to UI if he loses his job) is paid a higher wage than a worker in a type 2 position. It is worth noting, also, that the average wage paid in type 2 positions is above the legal monthly minimum wage. This reinforces our choice of a negotiated wage in type 2 positions rather than an exogenous wage (the minimum wage).

The data set provides information on the monthly amount of insurance benefits. Finally, the unemployed who do not meet the eligibility criteria for UI are supposed to receive the assistance benefit $b = 381$.

w_1	w_2	a	b
1370	867	655	381

Table 3.3: The estimated wages and unemployment benefits. In euros.
European Panel, January 1994-December 1998, Insee.

The data set does not provide any information on the remaining parameters, namely the costs of posting a vacancy (γ_1 and γ_2), the productivity in type 1 and type 2 positions (y_1 and y_2), the interest rate (r) and the bargaining power (β). As usual, we assume that $r = 0.01$. Then, if the model is verified, the variables β, γ_1, γ_2, y_1 and y_2 can be written as functions of exogenous parameters (a, b and r), transition rates (s_1, s_2, p, d, $\theta_1^{1/2}$ and $\theta_2^{1/2}$) and wages (w_1 and w_2). In other words, once benefits, wages and transition rates are estimated, the cost of posting a vacancy and the productivity in both types of positions can be simply deduced from the model. However, different sets of parameters are consistent with the model. Therefore, we make an additionnal hypothesis: $y_1 = y_2$. The cost of posting a vacancy, the productivity and the bargaining power who verify the model under this hypothesis are reported in table 3.4.

γ_1	γ_2	y_1	y_2	β	r
4500	10000	1483	1483	0.73	0.01

Table 3.4: The deduced parameters. In euros.

The deduced value for β is equal to 0.73. An equal sharing of the surplus of filled jobs between workers and firms, the standard hypothesis in matching models, thus appears not consistent with the data. The share of workers in the surplus is then greater than the elasticity of the matching function with respect to the unemployment rate (0.5). Following Hosios (1990), this means that the aggregate production is not maximized in this economy.

4. The effects of different reforms of the French unemployment compensation system

Once the model has been calibrated to reproduce the main features of the French labour market, we can simulate the effects of different reforms of the unemployment compensation system on the following variables: the wages, the rate of unemployment, the share of the unemployed entitled to UI and social welfare.

4.1. Raising assistance benefits

A 10% increase in the assistance benefit (b) strengthens the threat point of UA recipients (B) when they bargain with firms over wages (table 4.1). This enables them to negotiate a higher wage (w_2 increases by 3.5% in the French case). As a consequence, type 2 positions become less profitable for firms and fewer vacancies for UA recipients are opened (θ_2 decreases). There is also an indirect effect on the insured segment of the economy. Indeed, now, an UI recipient

who exhausts his benefits will receive a higher assistance benefit. As a result, the utility of unemployment for UI recipients improves, which gives them a better position in the wage bargaining. This enables them to negotiate a higher wage (w_1), and less vacancies for UI recipients are opened by firms (θ_1 decreases). Note however that the quantitative impact of this policy on w_1 is small (+0.04%).

The number of UA recipients (u_2) increases strongly (+2.57%), for two reasons: on the one hand, the exit rate from unemployment assistance is lower, since firms open less vacancies for type 2 positions; on the other hand, more UI recipients exhaust their entitlement and become UA recipients. As for the number of UI recipients, it increases slightly (+0.33%), due to the fall in labour demand. Overall, we expect the impact of this policy on the unemployment rate to be quite small (+0.16 points i.e. +1.3%). At the same time, it should lower by around 1% the share of the unemployed entitled to UI.

b	w_1	w_2	$\theta_1^{1/2}$	$\theta_2^{1/2}$	u_1	u_2	u	$\frac{u_1}{u}$
381.0	1410.6	808.8	7.5	4.7	6.54	5.16	11.7	55.9
419.1	1411.2	837.1	7.4	4.6	6.57	5.29	11.86	55.4

Table 4.1: A 10 % increase in assistance benefits - employment effects

Table 4.2 shows that all the workers are expected to enjoy a slightly higher welfare after this reform, even when account is made of its funding. UA recipients' welfare ($\widetilde{B}$) increases slightly (0.18%) because the increase in the benefit dominates the associated unemployment rise. Concerning the rest of the individuals, there exists a positive effect for each of them that overcomes the rise in taxes to finance the assistance system and/or the higher unemployment rate. For UI recipients, this reason is the higher benefit they receive when they exhaust their rights to UI. Type-2 employed (entitled only to assistance) receive higher benefits in case of separation, and type-1 employed can negotiate a higher wage. Expected utilitarian welfare increases also slightly. Finally, firms are worse-off, since they have to pay higher wages.

b	$\widetilde{B}$	$\widetilde{U}$	$\widetilde{E}_2$	$\widetilde{E}_1$	W	W_F
381.0	77.88	78.91	79.48	79.91	79.73	337.87
419.1	78.02	78.95	79.52	79.92	79.75	335.37

Table 4.2: A 10 % increase in assistance benefits - welfare effects

4.2. Raising insurance benefits

A more generous insurance benefit does not have the same effects on the different types of agents. Indeed, while raising UI benefits pushes up w_1 and lowers θ_1 (threat point effect), the wage bargained by former UA recipients becomes smaller (table 4.3). The reason is the following : an UA recipient expects first to find a type 2 position, and next, after some months of employment, to obtain a type 1 job. Now, a higher w_1 means that holding a type 1 job becomes more profitable, so the value of an agreement to an UA recipient goes up. Thus, his position in bargaining is weaker and he accepts a lower wage (w_2). In turn, firms open more vacancies for UA recipients (θ_2 increases). Note that this indirect effect is important in quantitative terms for the French case : a 6.5% raise of a decreases w_2 by 2.35%.

Logically, the number of UI recipients increases. More surprisingly, the number of UA recipients is also higher, even though they find a job quicker. The reason is the following: since the exit rate from unemployment is lower for UI recipients, more of them exhaust their entitlement and become UA recipients. On the whole, the size of the rise in the unemployment rate (+1.1%) is comparable to the one obtained when raising insurance UA benefits (1.3%).

a	w_1	w_2	$\theta_1^{1/2}$	$\theta_2^{1/2}$	u_1	u_2	u	$\frac{u_1}{u}$
655	1410.6	808.8	7.5	4.77	6.54	5.16	11.7	55.95
698	1412.0	789.8	7.3	4.78	6.62	5.21	11.83	55.98

Table 4.3: A 6.5 % increase in insurance benefits - employment effects

The welfare effects of this policy differ also from those of an increase in UA benefits (table 4.4). A more generous UI system ameliorates the situation of UI recipients and that of type-1 employed, who can negotiate a higher wage and receive a higher unemployment compensation in case of job loss. In contrast, it worsens the welfare of UA recipients and type-2 employed due to the important reduction in their (present or future) wages. Overall, total utilitarian welfare increases very slightly (+0.008%) and firms are worse-off.

a	$\widetilde{B}$	$\widetilde{U}$	$\widetilde{E}_2$	$\widetilde{E}_1$	W	W_F
655	77.880	78.91	79.483	79.91	79.736	337.87
698	77.879	78.95	79.481	79.917	79.743	331.73

Table 4.4: A 6.5 % increase in insurance benefits - welfare effects

4.3. Increasing the duration of UI entitlement

In the model, increasing the duration of UI entitlement corresponds to a decrease in d, the probability for an UI recipient of becoming an UA recipient. Raising by 3 months the duration of UI entitlement first affects the position of UI recipients when they bargain over wages with firms. Indeed, it takes more time for UI recipients for exhausting their entitlement. This strengthens their bargaining position, enables them to negotiate a better wage (w_1) and improves the value of a type 1 position. Since UA recipients expect they will at last obtain a type 1 job, the uninsured segment of the economy is also affected. More precisely, UA recipients have now a weaker threat point in the wage bargaining and get a lower wage (w_2 decreases by 1.39%). In turn, firms open more vacancies for type 2 positions. The number of UI recipients increases importantly (+3.62%), while that of UA recipients decreases by a larger extent (-5.52%). On the whole, this means that raising by 3 months the duration of UI entitlement *decreases* moderatly the rate of unemployment (by 0.41%) and increases strongly the share of the unemployed entitled to UI (of 4.04%).

d	w_1	w_2	$\theta_1^{1/2}$	$\theta_2^{1/2}$	u_1	u_2	u	$\frac{u_1}{u}$
3.2	1410.6	808.8	7.5	4.7	6.54	5.16	11.7	55.9
2.92	1411.4	797.6	7.4	4.7	6.78	4.87	11.65	58.2

Table 4.5: A 3 months increase in the duration of UI entitlement - employment effects

Table 4.6 presents the welfare effects of this policy. In this case, the division between winners and losers corresponds to a cleavage between unemployed and employed. Both types of unemployed gain. This is due essentially[15] to the fact that an increase in the duration of UI insurance corresponds to a more generous unemployment system (longer duration of total coverage and/or better coverage, since the equilibrium value of insurance benefits is higher than that of assistance benefits). Concerning the employed, type-1 agents lose because of the extra cost associated to the reform and type-2 employed due to the lower wages they get. The overall welfare effect of workers is positive (+0.02%) and firms are worse-off.

4.4. Softening eligibility : reducing the duration of the employment spell required for UI entitlement

In the model, a decrease in the employment spell duration required for UI entitlement takes the form of an increase in p. Since workers of type 2 become more easily workers of type 1, UA

[15] An additional reason is that after the reform it is easier on average to find a job.

d	$\widetilde{B}$	$\widetilde{U}$	$\widetilde{E}_2$	$\widetilde{E}_1$	W	W_F
3.2	77.88	78.91	79.48	79.91	79.73	337.87
2.92	78.1	79.59	79.42	79.83	79.75	334.17

Table 4.6: A 3 months increase in the duration of UI entitlement - welfare effects

recipients expect they will obtain more quickly a type 1 job. This weakens their threat point (B) when they bargain with firms over wages. Thus they get a much lower wage (w_2 decreases by 16.56%) (table 4.7). In turn, firms open more vacancies for UA recipients (θ_2 increases). Since UA recipients find more easily a job, the position of UI recipients in the wage bargaining is strengthened. The number of UI recipients increases (+0.88%), while that of UA recipients decreases (-2.99%). On the whole, this means that shortening by 1 month the duration of the employment spell required for UI entitlement slightly decreases the unemployment rate (by 0.82%) while it increases the share of the unemployed entitled to UI (by 1.72%).

p	w_1	w_2	$\theta_1^{1/2}$	$\theta_2^{1/2}$	u_1	u_2	u	$\frac{u_1}{u}$
23.0	1410.6	808.8	7.5	4.7	6.54	5.16	11.7	55.9
29.87	1411.2	674.8	7.4	4.8	6.6	5.0	11.6	56.9

Table 4.7: A 1 month decrease in the duration of the employment spell required for UI entitlement - employment effects

Concerning welfare, all the agents gain from this policy (table 4.8). UA recipients are better-off since whenever they get a job, they gain more quickly their eligibility for insurance, implying both a higher wage and a higher unemployment compensation. This effect overcomes the important cut in the present wage for type-2 employed. UI recipients gain because they expect to get a higher wage and because losing elibility becomes less costly, since $\widetilde{B}$ is higher now. Concerning the employed, type-2 agents are in a better position if they lose their job, while for type-1 individuals the additional cost of financing the insurance system is compensated by higher wages. Again, the expected utilitarian welfare is higher. Firms are the only losers, since they pay higher wages.

5. Conclusion

In this paper, we suggest that a change in the unemployment compensation scheme has not the same quantitative impact on employment and welfare in a country where both unemployment insurance and assistance coexist than in a country where only one of them exists. Different

p	$\widetilde{B}$	$\widetilde{U}$	$\widetilde{E}_2$	$\widetilde{E}_1$	W	W_F
23.0	77.88	78.91	79.48	79.91	79.73	337.87
29.87	78.93	78.93	79.53	79.92	79.75	335.03

Table 4.8: A 1 month decrease in the duration of the employment spell required for UI entitlement - welfare effects

reforms of the unemployment compensation scheme are considered: an increase in the amount of insurance or assistance benefits; a longer duration of insurance benefits; a shorter duration of the employment spell necessary for UI eligibility. These two last reforms can be thought of as a softening of the eligibility criteria for insurance benefits. Our calibration exercises for the French case show that, as in the standard case, the amount of both types of benefits affects negatively employment, although the size of the impact is small. Policies that raise unemployment benefits ameliorate slightly social welfare even if account is taken of their financing cost, but do not have the same welfare impact for different groups of workers. A surprising result is that policies aimed at softening eligibility to UI *reduce* slightly unemployment. We show also that the welfare effects of different ways of softening eligibility can be quite different in terms of the impact on different groups, although expected welfare is always improved.

The calibration exercises will be extended in the future to study the unemployment compensation systems of other countries, and in particular the other European countries included in the European Panel Survey.

References

[1] Acemoglu, D. and R. Shimer (1999) "Productivity Gains From Unemployment Insurance", *Mimeo.*

[2] Albrecht, J. and S. Vroman (2001) "Equilibrium Search with Time-Varying Unemployment Benefits", *Mimeo.*

[3] Atkinson, A. and J. Micklewright (1991) "Unemployment compensation and labor market transitions: a critical review", *Journal of Economic Literature*, 29, 1679-1727.

[4] Coles, M. and A. Masters (2001) "Duration Dependence, UI Payments and Equilibrium Unemployment", *Mimeo.*

[5] Cahuc, P. and E. Lehmann (2000) "Should Unemployment Benefits Decrease with the Unemployment Spell", *Journal of Public Economics*, 77, 135-153.

[6] Cahuc, P. and A. Zylberberg (2001) *Le Marché du Travail.* De Boeck.

[7] Fougère, D. and T. Kamionka (1992) "Un modèle markovien du marché du travail", *Annales d'Economie et de Statistique*, 27, 149-188.

[8] Carling, K., B. Holmlund and A. Vejsiu (1999) "Do Benefit Cuts Boost Job Findings ? Swedish Evidence from the 1990s", *Mimeo.*

[9] Fredriksson, P. and B. Holmlund (1999) "Optimal Unemployment Insurance in Search Equilibrium", *Mimeo.*

[10] Hopenhayn, H. and J.P. Nicolini (1997) "Optimal Unemployment Insurance", *Journal of Political Economy*, 105(2), 412-438.

[11] Lehmann, E. (1999) "Replacing Unemployment Benefits by Basic Income : a Numerical Evaluation in a Matching Model with Heterogeneous Skills", *Mimeo.*

[12] Marimon, R. and F. Zilibotti (1999) "Unemployment vs. Mismatch of Talents : Reconsidering Unemployment Benefits", *The Economic Journal*, 109, 266-291.

[13] Mortensen, D. (1977) "Unemployment Insurance and Labor Supply Decisions", *Industrial and Labor Relations Review* 30, 505-17.

[14] Ortega, J., C. Gollier and F. Portier (2000) "Unemployment Compensation: International Experiencies and Approaches", *UNEDIC*, April 2000.

[15] Pavoni, N. (1999) "Optimal Unemployment Insurance with Utility Bounds", *Mimeo.*

[16] Pissarides, C.A. (2000) *Equilibrium Unemployment Theory*, Second edition, MIT Press.

[17] Rioux L. (2001) "Recherche d'emploi et insertion professionnelle des allocataires du RMI", *Economie et Statistique,* 346-347, 13-32.

[18] Van den Berg, G. (1990) "Nonstationarity in Job Search Theory", *Review of Economic Studies,* 57, 255-277.

[19] Van der Linden, B. and E. Dor (2001) "Labour Market Policies and Equilibrium Unemployment : Theory and Application for Belgium", *Mimeo.*

6. Appendix A: the rules of unemployment insurance

According to their age and their past employment duration, the unemployed are in one of eight possible channels (table 6.1).

Channel	Past employment duration	Age	Benefits duration
1	4 months during the last 8 months	Indifferent	4 months
2	6 months during the last 12 months	Indifferent	7 months
3	8 months during the last 12 months	Less than 50 years	15 months
4	8 months during the last 12 months	More than 50 years	21 months
5	14 months during the last 24 months	Less than 50 years	30 months
6	14 months during the last 24 months	More than 50 years	45 months
7	27 months during the last 36 months	Between 50 and 55 years	45 months
8	27 months during the last 36 months	More than 55 years	60 months

Table 6.1: The rules of unemployment insurance 1993-1998